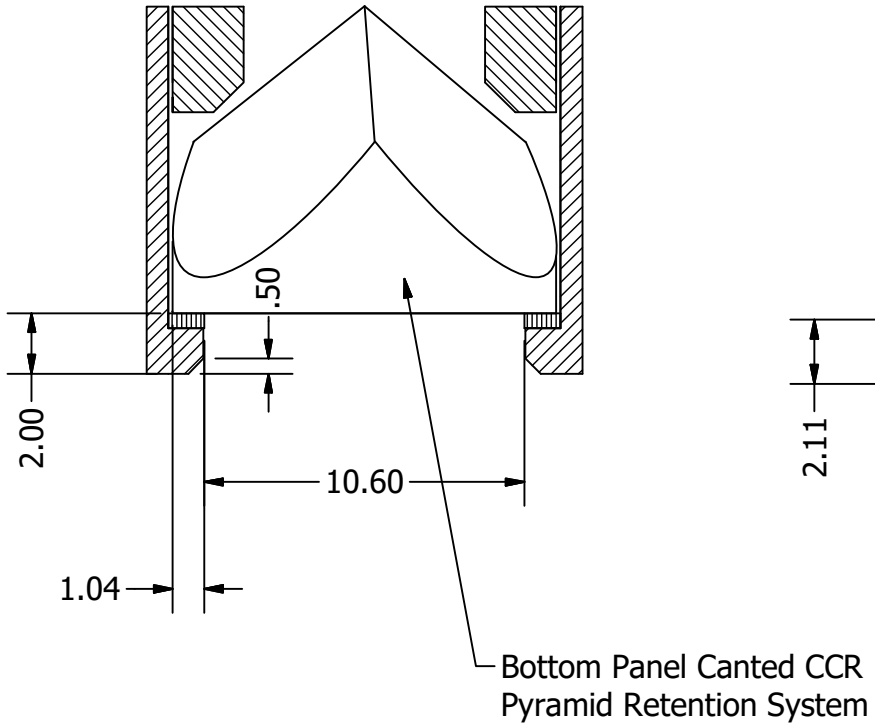

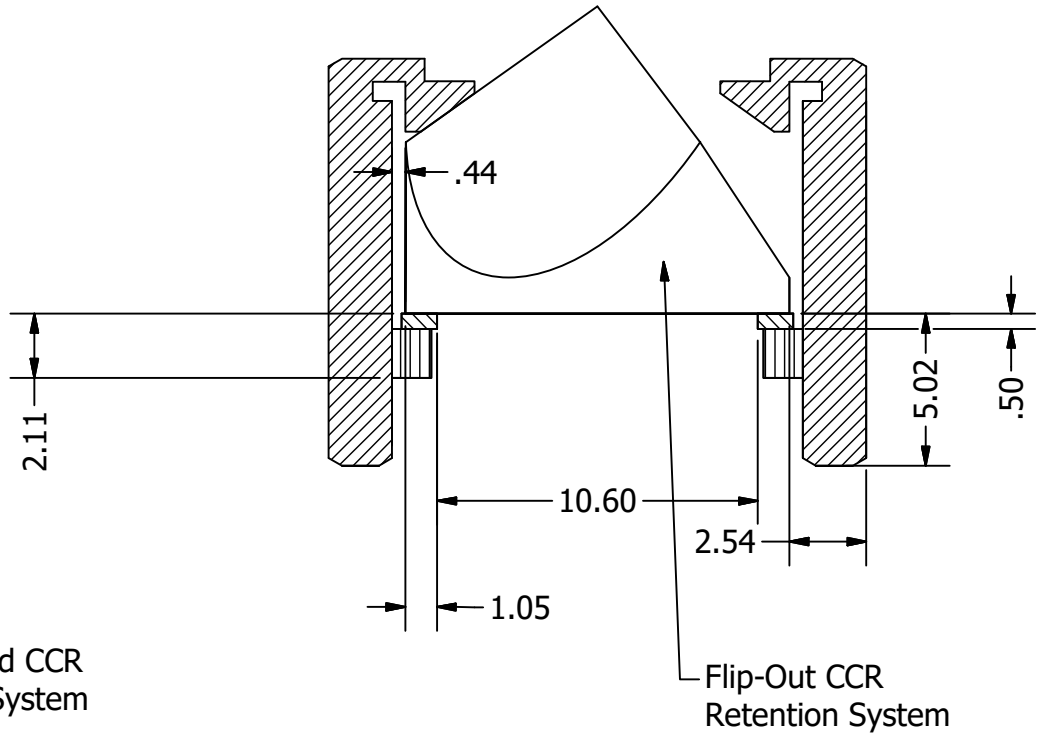

DRAWN Byron Davis	2/8/2018	Georgia Institute of Technology
CHECKED		TITLE
QA		CCR Occlusion Diagram
MFG		
APPROVED		
		SIZE A / DWG NO CCR Occlusion Diagram / REV
		SCALE / SHEET 1 OF 1