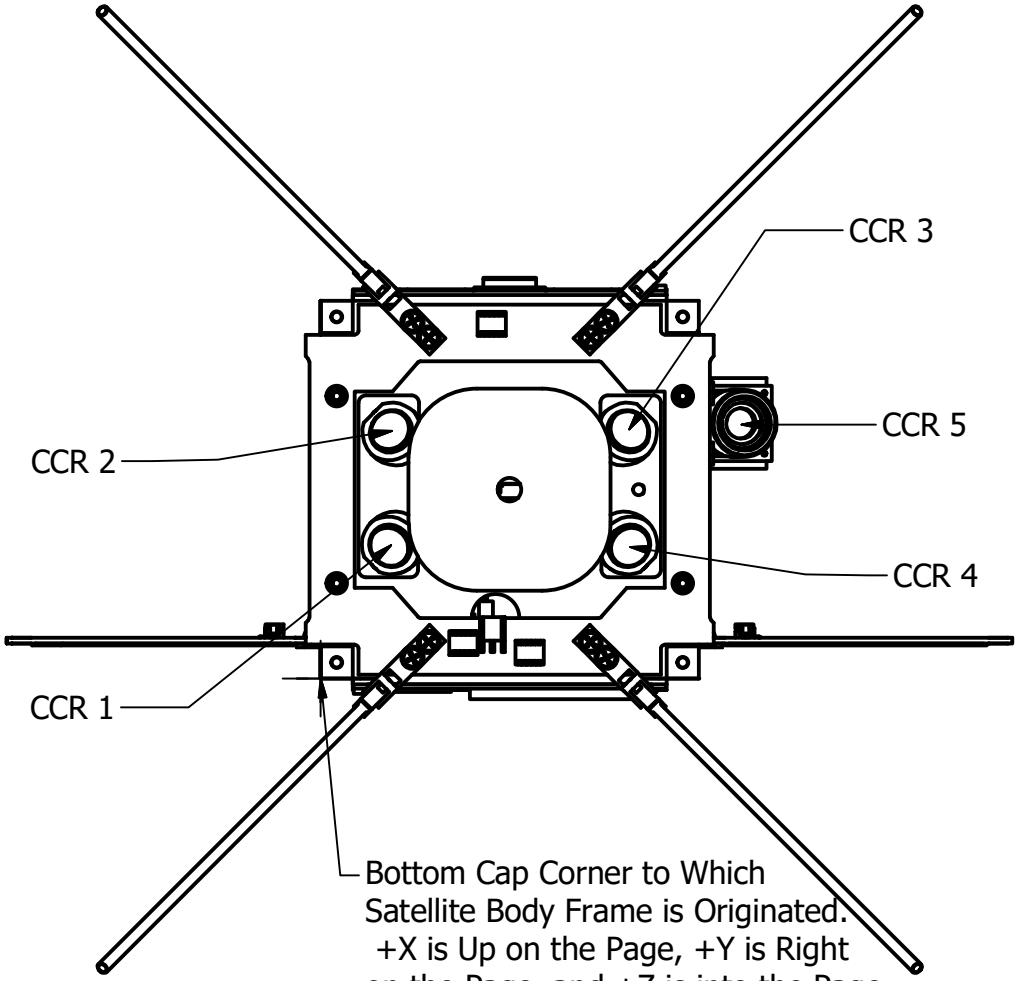

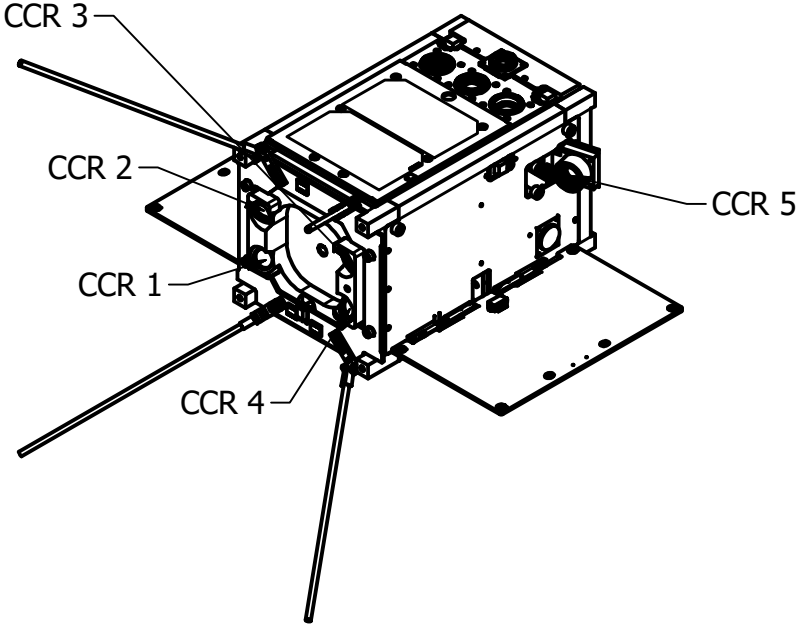

DRAWN Byron Davis	2/6/2018	
CHECKED		TITLE CCR Enumeration Scheme
QA		
MFG		
APPROVED		
		SIZE A / DWG NO CCR Enumeration Scheme / REV
		SCALE 1 / 2 / SHEET 1 OF 1