ILRS SLR MISSION SUPPORT REQUEST FORM (version: January 2018)

SUBMISSION STATUS:

- ○ New Submission (default)
- ◉ Incremental Submission (accepted only for a follow-on mission; fill-in new information only)

  (provide the reference mission and the date approved by the ILRS: Compass satellites)

SECTION I: MISSION INFORMATION:

General Information:

Satellite Name: BeiDou3-M10

Satellite Host Organization: China Satellite Navigation Engineering Center

Web Address: _____

Contact Information:

Primary Technical Contact Information:

Name: Gao Weiguang

Organization and Position: _____

Address: Building 2,Area C,A 18 Xingshikou Road,Haidian,Beijing,P.R,China

Phone No.: 86-10-88102316

E-mail Address: gaowg@beidou.gov.cn

Alternate Technical Contact Information:

Name: _____

Organization and Position: _____

Address: _____

Phone No.: _____

E-mail Address: _____

Primary Science Contact Information:

Name: Chen Gucang

Organization and Position: _____

Address: Building 2,Area C,A 18 Xingshikou Road,Haidian,Beijing,P.R,China

Phone No.: 86-10-88102307

E-mail Address: Chengc@beidou.gov.cn

Alternate Science Contact Information:

Name: _____

Organization and Position: _____

Address: _____

Phone No.: _____

E-mail Address: _____

Mission Specifics:

Scientific or Engineering Objectives of Mission:
(specify)

Navigation,Positioning,Timing,Geodesy

Role of Satellite Laser Ranging (SLR) for the Mission:
(specify)

Precise orbit determination

Anticipated Launch Date: March 29,2018

Expected Mission Duration: 8 years

Required Orbital Accuracy: As high as possible

Anticipated Orbital Parameters:

Altitude (Min & Max for eccentric orbits): 21500 km

Inclination: 55 degrees

Eccentricity: 0.0004554

Orbital Period: 773 min

Frequency of Orbital Maneuvers: none

Mission Timeline:
(example)
Should include when SLR is to start within the mission timeline, such as "on insertion into orbit" or "launch +N" days.

From July 1, 2018

Tracking Requirements:

Tracking Schedule: ◉ horizon-to-horizon ○ custom (specify: _____)

Spatial Coverage: ◉ global ILRS network ○ custom (specify: _____)

Temporal Coverage: ◉ full-time ○ custom (specify: _____)

Normal Point Bin Size (Time Span): 300 seconds

(Choose one from 5, 15, 30, 120 and 300 seconds. Justify if other bin size is required.)
(See the "Bin Size" of other satellites on the ILRS Web site at
http://ilrs.gsfc.nasa.gov/missions/satellite_missions/current_missions/index.html .)

Prediction Center: Shanghai

Prediction Technical Contact Information:

Name: Zhang Haifeng

Organization and Position: Shanghai Astronomical Observatory

Address: 80 Nandan Road, Shanghai

Phone No.: +86-21-64696290

E-mail Address: hfzhang@shao.ac.cn

Priority of SLR for POD: ○ Primary ◉ Secondary ○ Backup

Other Sources of POD:

☐ GNSS ☐ DORIS ☐ Accelerometer ☒ other (specify: Microwave)

Other comments on mission information:

(specify) (list backup prediction centers and references/links to non-SLR techniques if available)

none

SECTION II: TRACKING RESTRICTIONS:

Several types of tracking restrictions have been required during some satellite missions. See *http://ilrs.gsfc.nasa.gov/satellite_missions/restricted.html* for a complete discussion.

1) Elevation restrictions: Certain satellites have a risk of possible damage when ranged near the zenith. Therefore a mission may want to set an elevation (in degrees) above which a station may not range to the satellite.
2) Go/No-go restrictions: There are situations when on-board detectors on certain satellites are vulnerable to damaged by intense laser irradiation. These situations could include safe hold position or maneuvers. A small ASCII file is kept on a computer controlled by the satellite's mission which includes various information and the literal "go" or "nogo" to indicate whether it is safe to range to the spacecraft. Stations access this file by ftp every 5-15 minutes (as specified by the mission) and do not range when the flag file is set to "nogo" or when the internet connection prevents reading the file.
3) Segment restrictions: Certain satellites can allow ranging only during certain parts of the pass as seen from the ground. These missions provide station-dependent files with lists of start and stop times for ranging during each pass.
4) Power limits: There are certain missions for which the laser transmit power must always be restricted to prevent detector damage. This requires setting laser power and beam divergence at the ranging station before and after each pass. While the above restrictions are controlled by software, this restriction is often controlled manually.

Many ILRS stations support some or all of these tracking restrictions. You may wish to work through the ILRS with the stations to test their compliance with your restrictions or to encourage additional stations that are critical to your mission to implement them.

The following information gives the ILRS a better idea of the mission's restrictions. Be aware that once predictions are provided to the stations, there is no guarantee that forgotten restrictions can be immediately enforced.

Are there any science instruments, detectors, or other instruments on the spacecraft that can be damaged or confused by excessive radiation, particularly in any one of these wavelengths (532nm, 1064nn, 846nm, or 432nm)?

⦿ No ○ Yes (specify the instrument or detector in question, providing the wavelength bands and modes of sensitivity.)

Are there times when the LRA (Laser Retroreflector Array) will not be accessible from the ground?

⦿ No ○ Yes (specify: _____

(If so, go/nogo or segmentation files might be used to avoid ranging an LRA that is not accessible.)

→ Skip the next questions and go directly to SECTION III if you answered "No" to both of the above questions.

Is there a need for an elevation tracking restriction?

☒ No ☐ Yes (What elevation (minimum to maximum in degrees)? _____ degrees)

Is there a need for a go/no-go tracking restriction?

☒ No ☐ Yes (Explain the reason(s) _____)

Is there a need for a pass segmentation restriction?

☒ No ☐ Yes (Explain the reason(s) _____)

Is there a need for a laser power restriction?

☒ No

☐ Yes (Under what circumstances? _____)

(What is the maximum permitted power level **at** the satellite (nJ/cm^2)? _____)

(Is manual control of laser transmit power acceptable? ☐ Yes ☐ No)

For ILRS stations to range to satellites with restrictions, the mission sponsor must agree to the following statement:

"The mission sponsor agrees not to make any claims against the station or station contractors or subcontractors, or their respective employees for any damage arising from these ranging activities, whether such damage is caused by negligence or otherwise, except in the case of willful misconduct."

Please provide signature to express agreement to above statement:

Signature: Gao Weiguang

Digitally signed by Gao Weiguang
DN: cn=Gao Weiguang, o, ou, email=gaowg@beidou.gov.cn, c=CN
Date: 2018.07.03 22:15:25 Z

Date: July 3,2018

Name (print): Gao Weiguang

Organization and Position: China Satellite Navigation Engineering Center

Other comments on tracking restrictions:
(specify)

none

SECTION III: RETROREFLECTOR ARRAY INFORMATION:

A prerequisite for accurate reduction of laser range observations is a complete set of pre-launch parameters that define the characteristics and location of the LRA on the satellite. The set of parameters should include a general description of the array, including references to any ground-tests that may have been carried out, array manufacturer and whether the array type has been used in previous satellite missions. So the following information is requested:

Retroreflector Primary Contact Information:

Name: Zhang Haifeng

Organization and Position: Shanghai Astronomical Observatory,Chinese Academy of Sciences. Professor

Address: No.80,Nandan Road,Xuhui,Shanghai,P.R,China

Phone No.: 86-21-64696290

E-mail Address: hfzhang@shao.ac.cn

Array type:

○ Single reflector ○ Spherical ○ Hemispherical/Pyramid ◉ Planar

○ other (specify: _____)

Attach a diagram or photograph of the satellite that shows the position of the LRA, at the end of this document.

☒ Attached

Attach a diagram or photograph of the whole LRA at the end of this document.

◉ Attached ○ Same as above, Not attached (acceptable only for a cannonball satellite)

Array manufacturer:

Shanghai Astronomical Observatory,Chinese Academy of Sciences

Link (URL and/or reference) to any ground-tests that were carried out on the array:

none

Has the LRA design and/or type of cubes been used previously?

○ No ◉ Yes (List the mission(s): Compass-M1/M3)

For accurate orbital analysis it is essential that full information is available in order that the 3-dimensional position of the satellite center of mass may be referred to the location in space at which the laser range measurements are made. To achieve this, the 3-D location of the LRA phase center must be specified in a satellite-body-fixed reference frame with respect to the satellite's mass center. In practice this means that the following parameters must be available at 1 mm accuracy or better.

Define the satellite-body-fixed XYZ coordinates (i.e. origin and axes) on the spacecraft:
(specify) (add a diagram in the attachment)

The origin is at the center of mass of satellite.

Relate the satellite-body-fixed XYZ coordinates to a Celestial/Terrestrial/Solar Reference Frame including the attitude control policy:
(specify) (add a diagram in the attachment)

X-axis: positive along velocity vector
Z-axis: positive towards nadir
Y-axis: completing the right-handed orthogonal system

The 3-D location of the satellite's mass center in satellite-body-fixed XYZ coordinates is:

- (●) Always fixed at (0, 0, 0)
- ( ) Always fixed at (_____, _____, _____) in mm
- ( ) Time-varying by approximately (_____) mm during the mission lifetime.
  Will a time-variable table of the mass center location be available on the web?
  ( ) No ( ) Yes (URL: _____)

The 3-D location (or time-variable range) of the phase center of the LRA in the satellite-body-fixed XYZ coordinates:

(-598.5, 427, 613) in mm

The following information on the corner cubes must also be supplied.

The XYZ coordinates referred to in the following are given in:

- (●) Satellite-body-fixed system (same as above)
- ( ) LRA-fixed system (specify below)
  (specify the origin and orientation) (add a diagram in the attachment)

List the position (XYZ) of the center of the front face of each corner cube, and the orientation (two angles or normal vector) and the clocking (horizontal rotation) angle of each corner cube. Note that the angles should be clearly defined.

○ Attached at the end of this document
◉ Listed here (acceptable for small number (10 or fewer) of corner cubes)
(specify) (add a diagram in the attachment)

The planar shape of LRA is applied by the way of the each CCR on the same plane and the normal vector of each CCR points to the earth's center (Z). The distance between the front face of CCR and the phase center of LRA is 34.7mm. So the Z value of the center of the front face of each corner cube is 613mm+34.7mm=647.7mm.
The orientation (two angles or normal vector) and the clocking (horizontal rotation) angle of each corner cube is random.

Is the corner cube recessed in its container (i.e. can the container obscure a part of the corner cube)?
◉ No ○ Yes (specify below)

(specify) (add a diagram)

The size of each corner cube: Diameter (33.2) mm Height (24) mm

The material from which the cubes are manufactured (e.g. quartz):
quartz

The refractive index of the cube material
= 1.461 for wavelength $\lambda = 0.532$ micron
= see attachment(Refractive Index and Dispersion) as a function of wavelength λ (micron):

The group refractive index of the cube material, as a function of wavelength λ (micron):
= 1.485 for wavelength $\lambda = 0.532$ micron
= 1.462@1064nm as a function of wavelength λ (micron):

Dihedral angle offset(s) and manufacturing tolerance (in arcseconds):

0.8±0.3aresec

Radius of curvature of front surfaces of cubes:

◉ Not applied ○ Yes (specify: _____)

Flatness of cubes' surfaces:

0.1 wavelength

Back-face coating:

◉ Uncoated ○ Coated (specify the material: _____)

Other comments on LRA:

(specify) (add a reference to a study of the optical response simulation/measurement if available) (add a diagram if applicable)

none

SECTION IV: MISSION CONCURRENCE

The ILRS is a voluntary organization that operates under the auspices of the International Association of Geodesy (IAG). The ILRS adheres to the IAG policy to make all acquired laser ranging data and derived products publicly available. We request that the mission website, as well as mission publications, reference the scientific work derived from ILRS data and derived products, **acknowledge** the role of the ILRS. This acknowledgment is crucial for the continued support from the funding agencies of the ILRS participating organizations.

As an authorized representative of the BeiDou3-M10 mission, I hereby request and authorize the ILRS to track the satellite described in this document.

Name (print): Zhang Haifeng

Organization and Position: Shanghai Astronomical Observatory,Chinese Academy of Sciences

Signature: Zhang Haifeng

Digitally signed by Zhang Haifeng
DN: cn=Zhang Haifeng, o, ou, email=hfzhang@shao.ac.cn, c=CN
Date: 2018.07.03 22:13:16 Z

Date: July 3, 2018

Send form to: ILRS Central Bureau
c/o Carey Noll
NASA GSFC
Code 61A
Greenbelt, MD 20771
USA
301-614-6542 (Voice)
301-614-6015 (Fax)
Carey.Noll@nasa.gov

SECTION V: ATTACHMENT(S)

Attachments of ILRS SLR Mission Support Request Form for BeiDou3-M10

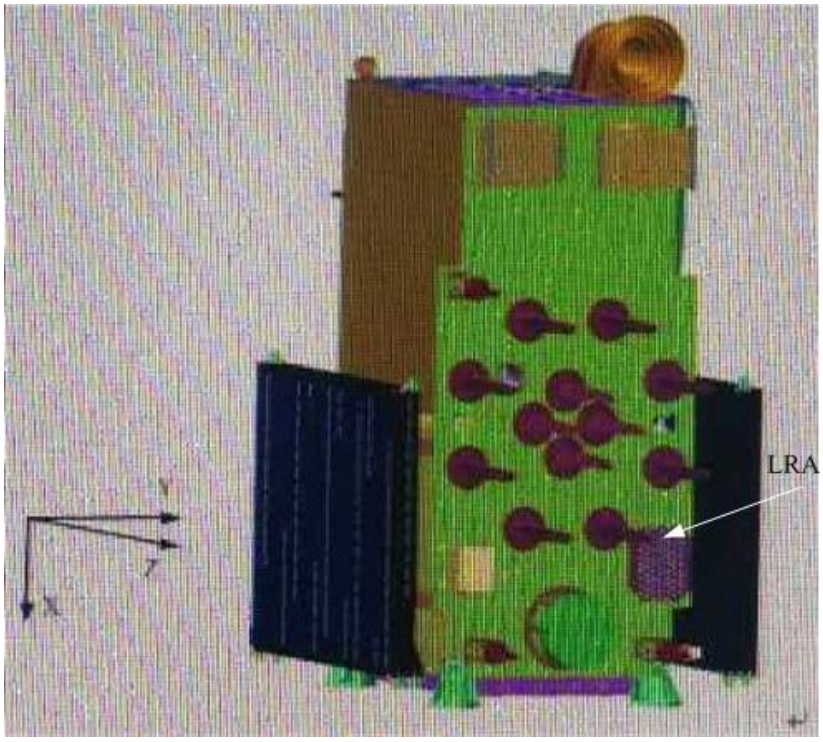

Fig.1 The position of LRA on the BeiDou3-M10 satellite

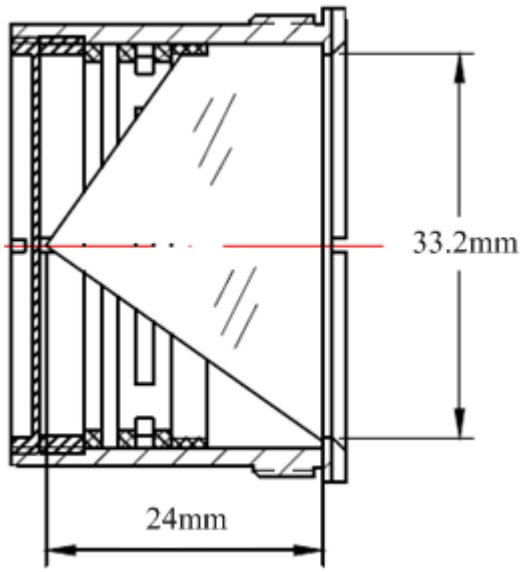

Fig.3 The structure of single CCR on BeiDou3-M10 satellite

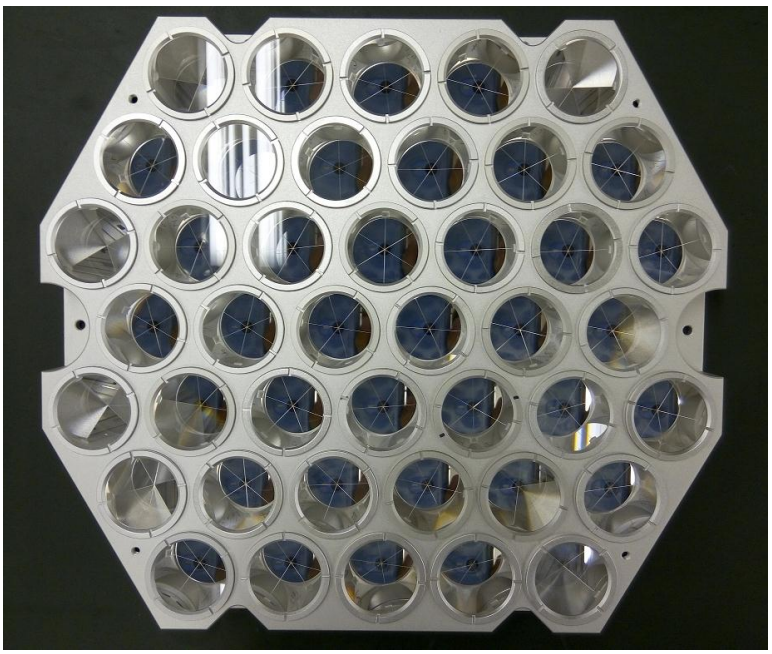

Fig.3 The installation of LRA on BeiDou3-M10 satellite

Refractive Index and Dispersion:

Conditions: 22 °C, 760 mm Hg, N_2

Wavelength [Vacuum] [nm]	Refractive Index[2] n	Thermal Coefficient Δn/ΔT[3] [ppm/C]	Polynomial Dispersion Equation Constants[1], 22 °C	
1128.950	1.448866	9.6	A_0	2.104025406E+00
1014.260 n_t	1.450241	9.6	A_1	-1.456000330E-04
852.344 n_s	1.452463	9.7	A_2	-9.049135390E-03
706.714 n_r	1.455144	9.9	A_3	8.801830992E-03
656.454 n_C	1.456364	9.9	A_4	8.435237228E-05
632.990	1.457016	10.0	A_5	1.681656789E-06
587.725 n_d	1.458461	10.1	A_6	-1.675425449E-08
546.227 n_e	1.460076	10.2	A_7	8.326602461E-10
486.269 n_F	1.463123	10.4	**Sellmeier Dispersion Equation Constants[2], 22 °C**	
435.957 n_g	1.466691	10.6		
404.770 n_h	1.469615	10.8	A_1	0.68374049400
365.119 n_i	1.474539	11.2	A_2	0.42032361300
334.244	1.479764	11.6	A_3	0.58502748000
312.657	1.484493	12.0		
253.728	1.505522	13.9	B_1	0.00460352869
228.872	1.521154	15.5	B_2	0.01339688560
214.506	1.533722	17.0	B_3	64.49327320000
206.266	1.542665	18.1	**Δn/ΔT Dispersion Equation Constants[3], 20-25 °C**	
194.227	1.558918	20.3		
184.950	1.575017	22.7	C_0	9.390590
			C_1	0.235290
			C_2	-1.318560E-03
			C_3	3.028870E-04
			Other Optical Properties	
			nF'-nC'	0.006797
			Stress Coefficient	35.0 nm/cm MPa
			Abbe Constants:	
			V_e	67.6
			V_d	67.8

**1 Polynomial Equation:* $n^2 = A_0 + A_1 \lambda^4 + A_2 \lambda^2 + A_3 \lambda^{-2} + A_4 \lambda^{-4} + A_5 \lambda^{-6} + A_6 \lambda^{-8} + A_7 \lambda^{-10}$ *with λ in µm*

**2 Sellmeier Equation:* $n^2-1 = A_1\lambda^2/(\lambda^2 - B_1) + A_2 \lambda^2/(\lambda^2 - B_2) + A_3 \lambda^2/(\lambda^2 - B_3)$ *with λ in µm*

**3 Δn/ΔT Equation:* $\Delta n/\Delta T\ [ppm/C] = C_0 + C_1\lambda^{-2} + C_2\lambda^{-4} + C_3\lambda^{-6}$ *with λ in µm*

The above dispersion equations for SiO_2 *were fit to the refractive indices of 20 wavelengths from 1129 nm to 185 nm.*