GFO-MA-GFZ-LR-0001

LRR User Manual

	Name	Date and Signature
Prepared by:	L. Grunwaldt	
PA:	Th. Gerber	

Document Change Record

Issue	Date	Page	Description of Change
1.0	12.01.15	all	First version
2.0	10.11,15	3	[RD 3] and [RD 4] replaced by related GRACE-FO documents
		9	Mass budget aligned with ICD, using real data from FM
		15	S/C CoM offset for optical reference point updated by values submitted by Airbus, related computations updated

LIST OF CONTENTS

1 Introduction 4
Scope 4
Applicable Documents 4
Reference Documents 4
2 LRR Design Summary 5
3 Detailed LRR Design Definition 6
Unit Mass Properties 9
Unit Coordinate system 9
4 LRR Performance 11
Return Signal Strength 11
Range Correction 11
The CoM Correction 14
The Influence of S/C Attitude 15
LRR Performance Degradation 16
5 LRR Constraints 16
6 LRR Operations 17
Unit Failure Modes 17
7 LRR Science Data Definition 17
8 Packaging, Transport, Handling and Storage Procedure 19
Red-tagged / Green-tagged Items 19

1 INTRODUCTION

Scope

This document provides visibility into the design of the LRR for the GRACE-FO mission and shows the main performance parameters. Instructions for the proper use of the equipment are given with respect to handling, center-of-mass and range correction.

The definition of the unit coordinate system is given as well.

Applicable Documents

[AD 1]	GFO.ICD.ASTR.SY.0004 " GFO ICD for LRR Instrument", Issue 2.0 (26 November 2014)
[AD 2]	JPL D-70441 "GRACE-FO Environmental Requirements Document"

Reference Documents

[RD 1]	not assigned
[RD 2]	"Calculation of the far field energy distribution of the CHAMP satellite retro reflector" – Final Report -; IOF Jena, 1997
[RD 3]	GFO-DD-GFZ-LR-0001 "LRR Design Description"
[RD 4]	GFO-AN-GFZ-LR-0001 "LRR Performance Analysis"
[RD 5]	R. Neubert, "The Center of Mass Correction (CoM) for Laser Ranging Data of CHAMP and GRACE", Technical Note for the ILRS (2006)
[RD 6]	ILRS Consolidated Ranging Data Normal Point Format Description (CRD NP),see http://ilrs.gsfc.nasa.gov/docs/2009/crd_v1.01.pdf

Acronyms

ATOX	Atomic Oxygen
CHAMP	Challenging Minisatellite Payload
CoM	Center of Mass
FoV	Field of View
GFZ	GeoForschungsZentrum Potsdam
GPSR	GPS Receiver for GRACE-FO
GRACE	Gravity Recovery and Climate Explorer
GRACE-FO	Gravity Recovery and Climate Explorer Follow-On
ILRS	International Laser Ranging Service
IOF	Fraunhofer Institute for Applied Optics
LEO	Low Earth Orbit
LRR	Laser Retro Reflector Array
S/C	Spacecraft
SLR	Satellite Laser Ranging

2 LRR DESIGN SUMMARY

The **Laser Retro Reflector** (LRR) onboard GRACE-FO shall be used to reflect short laser pulses (typically 35 ... 100 ps long) back to the transmitting SLR ground station thus enabling to measure directly the two-way range between the ground station and the S/C with a single-shot accuracy of 1 cm or better without any ambiguities. Because of the non-dispersive behaviour of the ionosphere to light waves, the negligible influence of tropospheric water vapour on the range correction and the easily predictable influence of other atmospheric parameters on the ranging results, the LRR is well-suited for the external calibration of the on-board microwave orbit determination system (GPSR).

The LRR consists of four optical cube corner reflectors which are optimised in their far field diffraction pattern to correct for the effect of light velocity aberration due to the relative motion between satellite and ground station to a high degree. The ranging signal from the transmitting ground station is reflected back to its origin independently from its angle of incidence as long as the cut-off entrance angle is not exceeded.

The LRR is a fully passive instrument and has therefore no specific operational modes. Once the LRR is directed towards an SLR ground station with the GRACE-FO S/C in nominal attitude, it is ready to perform its specific task to reflect laser pulses in a way that the effect of light velocity aberration is compensated for and an optimum optical link budget is established.

Figure 1: View of the GRACE-FO LRR

The LRR design is pyramid shaped with the outer surfaces inclined by 45 degrees with respect to the mounting plane. This ensures that for elevations exceeding 20 degrees above the SLR ground station the angle of light incidence to the individual prisms is below the cut-off angle and laser ranging is enabled.

The fixation of the LRR to the nadir side of the S/C structure is performed by means of 4 M5 screws. No thermal, power or data interface to the S/C is required.

The LRR has to be oriented in a way that the transmitting and receiving SLR ground station is optimally located within the diffraction far field. This will be achieved by mounting the LRR in a dedicated way with respect to the S/C velocity vector.

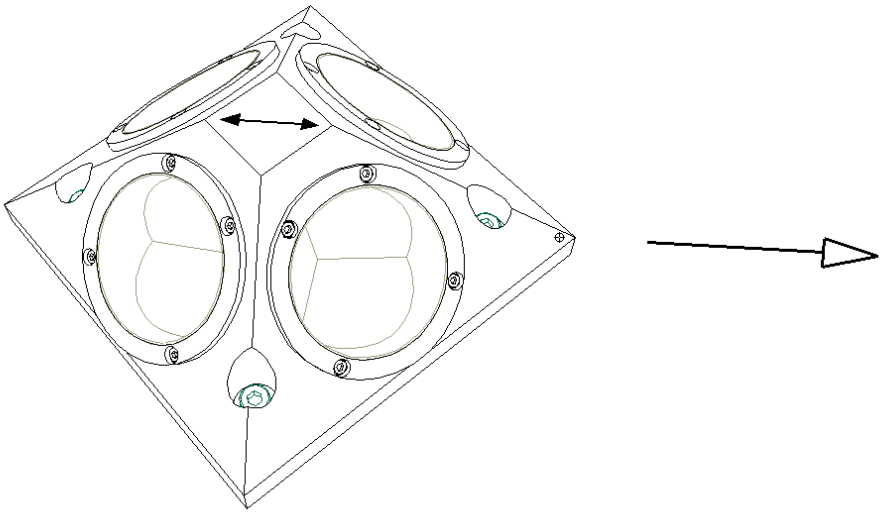

Figure 2: Required orientation of the LRR with respect to the GRACE-FO S/C velocity vector

As shown if Fig. 2, the double-arrow which is engraved into the LRR mechanical structure has to be aligned parallel (or anti-parallel) with the S/C velocity vector. The alignment requirements are moderate: ±0.5 degrees will be sufficient.

The mass of the LRR in flight configuration (i.e. without protective caps which have to be attached during ground operations for contamination protection) is ≤ 0.4 kg. A more detailed mass budget is presented in Section 4.

3 DETAILED LRR DESIGN DEFINITION

The GRACE-FO LRR is recurring equipment from LEO missions as CHAMP, GRACE and TerraSAR-X. It was designed in a way as to provide a compact array with the minimum number of retro reflecting prisms for a low orbit (4). The lower the number of prisms contributing to the reflected signal, the lower is the pulse spreading caused by the array and thus the higher is the achievable ranging precision. With the chosen design, only a single prism is contributing to the return signal in most relative orientations between S/C and SLR ground station.

The relative motion between satellite and transmitted light pulse gives rise to a deflection of the returned pulse from the direction it was transmitted to (velocity aberration of light). Without corrective actions performed to the LRR prisms, the reflected light pulse would miss the SLR ground station by the aberration angle

$$\alpha \approx 2 \cdot \frac{v}{c} \tag{1}$$

with v the S/C orbital velocity and c the velocity of light. For the orbital altitude of GRACE-FO, the maximum aberration angle is about 10 arc seconds.

In order to compensate for the effect of velocity aberration, the method of dihedral prism angle offset is chosen, i.e. making one of the prism angles different from the ideal 90 degree angle which would suffice for ground based applications without velocity aberration. The optimum angle for the given LRR design was found numerically by simulations of various combinations of azimuth/elevation angles between the S/C and the SLR station using ray-tracing methods (cf. [RD 2].

The dihedral offset angle gives rise to the production of two-spot far field diffraction patterns as shown in Fig. 3 for normal light incidence.

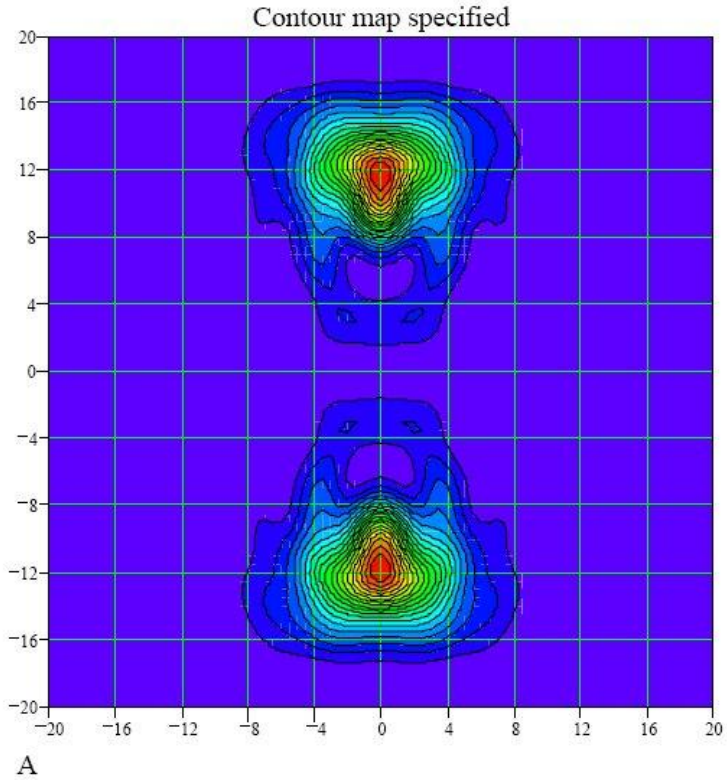

Figure 3: Two-spot far field diffraction pattern of a single prism at normal light incidence to the front face

With increasing incidence angle, the two lobes tend to broaden and to overlap but still ensure a good optical link budget with multi-photon return signals for all elevations exceeding 20 degrees and for all azimuths as required in [AD 1], cf. [RD 4].

The cube corner prisms of the reflector are made from fused quartz glass according to the specifications of Table 1. The reflecting surfaces are aluminium coated and covered by a protective layer of SiO_2 for reasons of the ATOX environment in LEO. The uncoated front face has to be slightly spherical to increase the diameter of the two lobes of the reflection pattern. The splitting into two lobes is caused by a slight offset of one of the dihedral angles.

Table 1: Specifications of the cube corner prisms

Parameter	Value
Vertex length	28 mm
Clear aperture of the front face	38 mm
Dihedral angle offset	-3.8” (smaller than 90 deg)
Radius of curvature of the front face	+500 m (convex)
Phase Index of refraction @ 532nm	1.461
Nominal separation of the far field maxima	24”
Nominal width of the far field peaks (20% intensity of max.)	10”

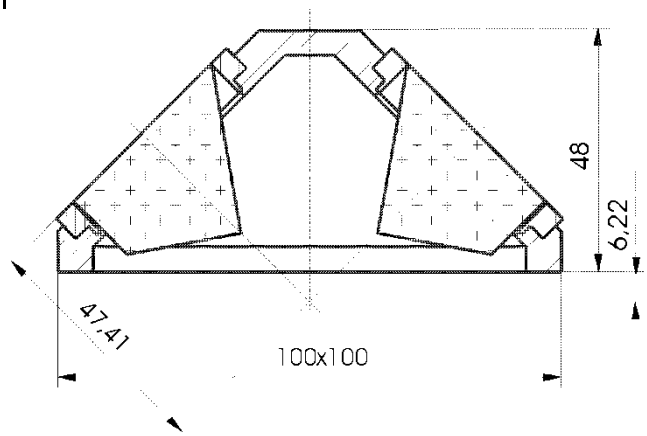

Figure 4: Sectional view of the LRR indicating the optical reference point

The prisms of the LRR array are glued into the fixation rings of the mechanical structure by means of two-component silicon rubber RTV- S 691.

Figure 4 shows the sectional view of the LRR. The intersection of the optical axes of all 4 prisms is defined as the optical reference point of the array. This point is defined solely by design and is invariant throughout the mission. All optical ranges to the LRR are referred to this point (cf. Section 5).

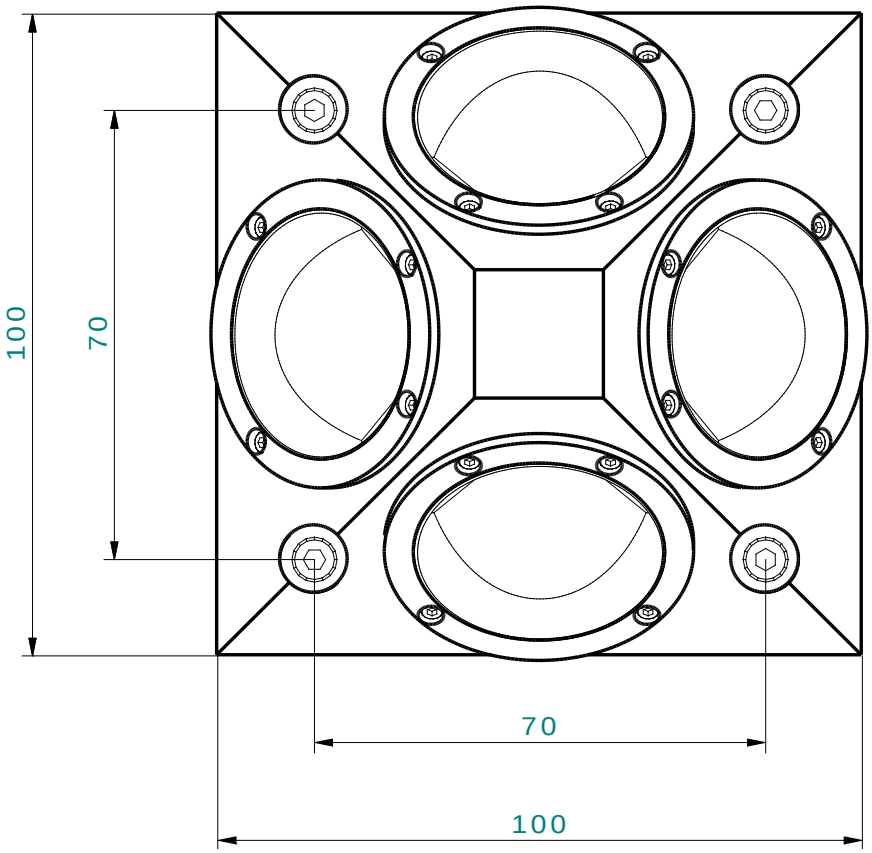

Figure 5: Top view of the LRR array

Figure 5 shows the top view of the LRR array. The prisms within their fixation rings are attached to the pyramid-shaped structure by means of 4 M2 screws each. The whole array is attached to the S/C structure via 4 M5 screws.

Unit Mass Properties

The GRACE-FO LRR array comprises the following mass properties (typical) according to Table 2:

Table 2: Typical LRR mass properties (without protective caps)

Part description	Number of parts	Mass per part / g	Total mass / g (rounded to full grams)
LRR structure	1	212	212
Mounted prism within fixation ring	4	45	180
M2 screws	16	0.3	5
LRR total			397

Unit Coordinate system

The following coordinate system is chosen for the LRR (cf. Figure 6):

- X-axis along the diagonal of the mounting surface, i.e. parallel to the engraved double arrow in the structure (cf. Figure 2); positive along to the S/C velocity vector.
- Z-axis along the rotational symmetry axis of the array (through the geometric center of the mounting surface). According to the mounting of the LRR at the nadir side of the GRACE-FO S/C [AD 1] this means that Z is positive towards nadir.
- Y-axis: completing the right-hand orthogonal system.

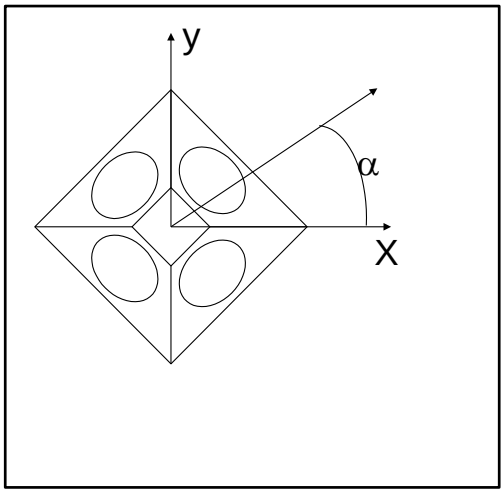

Figure 6: Unit coordinate system for the LRR

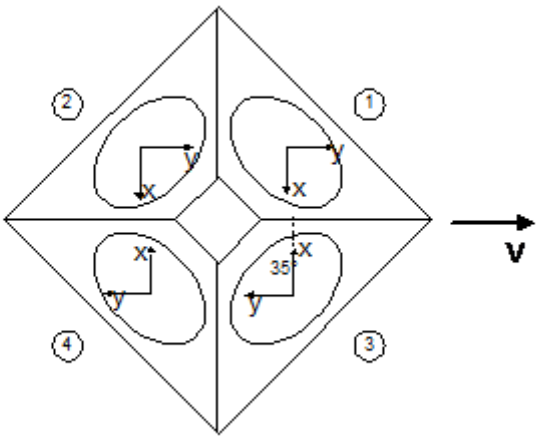

Figure 7 Required orientation of the single prisms within the LRR structure; the x-axis is parallel to the non-orthogonal axis, v indicates the S/C velocity vector

The orientation of the single LRR prisms according to the coordinate system as defined above with the non-orthogonal prism edge oriented inside the housing in the way as shown in Figure 7 ensures the proper matching of the far field diffraction pattern with the apparent SLR ground station position as seen from the S/C.

4 LRR PERFORMANCE

The following performance parameters are considered for the Laser Retro Reflector:

- Return signal strength
- Range correction
- CoM correction

Return Signal Strength

The return signal strength for the optimised LRR design according to Table 1 was numerically derived as a function of the incidence angle to the prism front surface for a wide variety of azimuth and elevation angles as seen from the transmitting ground station.

A well-balanced behaviour is found with very weak azimuthal dependence. For incidence angles up to 30 degree the irradiance at the ground station is still about 30% of the maximum in the far field pattern or more at any azimuthal orientation of the reflector. Even for an incidence angle of 40 degree (applicable at very high and very low angular elevations of the S/C over the SLR station), it does not drop below 10% of the maximum [RD 2]. Thus, multi-photoelectron return signals can be expected for all azimuths and elevations exceeding 20 degree for a typical SLR station with the parameters:

- laser divergence: $3 \cdot 10^{-4}$ rad
- laser energy : 5 mJ
- receiver telescope diam. 40 cm
- receiver system transmittance: 20%
- detector quantum efficiency: 5%

These SLR station parameters are very conservative (especially with respect to system transmittance and detector quantum efficiency). The experience of the SLR community confirms this statement for the in-orbit performance of the LRR array on missions like CHAMP, GRACE and TerraSAR-X.

Range Correction

As a reference point of the array, the intersection of the optical axes of the cube corner prisms is defined (cf. Figure 4). The range correction ΔR of a single cube corner referred to this point is given by the equation:

$$\Delta R(\alpha,\delta) = D \cdot \cos(\gamma) - L \cdot \sqrt{ng^2 - \sin^2(\gamma)} \qquad (2)$$

with D - distance of the prism front face from the reference point (D= 47.4 mm), L – vertex length of prism (L=28 mm), ng – group refraction index of quartz glass, γ - angle of light incidence (relative to the normal to the front face), α and δ - azimuth and nadir angle (relative to the normal to the front face).

The azimuth and nadir angles α and δ are explained in Figure 8 below. See also Figure 6 for the explanation of the LRR unit coordinate system (axes X, Y and Z).

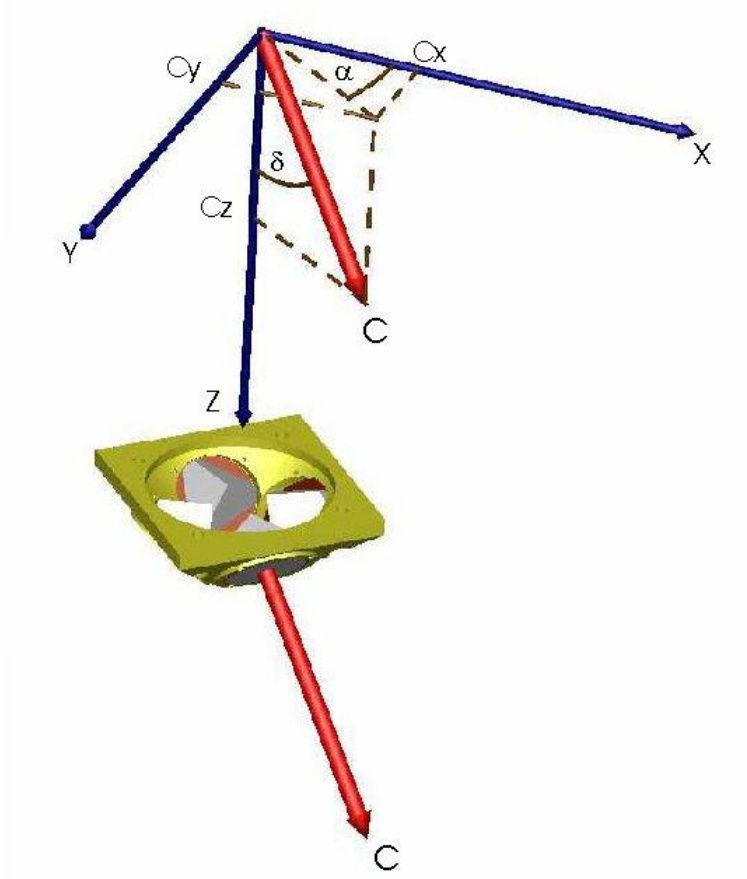

Figure 8: Azimuth and nadir angles in the LRR coordinate system

The azimuth angle α is 0° along the S/C velocity vector and 90° perpendicular to it (pointing along the S/C Y-axis in this case).

The nadir angle δ is 0° within the X-Y plane and 90° pointing towards nadir.

$\vec{C}$ is the unit vector from the LRR to the SLR ground station, its direction is formed by α and δ.

The dependence of the prism light incidence angle γ on the azimuth and nadir angles α and δ can be expressed as

$$\cos(\gamma) = \frac{\sqrt{2}}{2} \cdot \left(\sin(\alpha + \frac{\pi}{4}) \cdot \sin(\delta) + \cos(\delta) \right) \tag{3}$$

Tabulating the range correction according to (2) and (3) for discrete intervals of the azimuth angle α and the nadir angle δ, one obtains the data as given in Table 3.

Table 3: Range correction in mm for λ=532 nm and different orientations of the LRR

δ, α [°]	0	5	10	15	20	25	30	35	40	45
0	-3.1	-3.1	-3.1	-3.1	-3.1	-3.1	-3.1	-3.1	-3.1	-3.1
5	-1.8	-1.6	-1.5	-1.4	-1.4	-1.3	-1.2	-1.2	-1.2	-1.2
10	-.65	-.42	-.22	-.04	.11	.24	.34	.41	.45	.47
15	..26	.59	.89	1.2	1.4	1.6	1.7	1.8	1.9	1.9
20	.96	1.4	1.8	2.1	2.4	2.7	2.8	3.0	3	3.1
25	1.5	2.0	2.5	2.9	3.2	3.5	3.8	3.9	4	4.1
30	1.8	2.4	3.0	3.5	3.9	4.2	4.5	4.7	4.8	4.8
35	1.9	2.6	3.2	3.8	4.3	4.7	5.0	5.2	5.3	5.4
40	1.8	2.6	3.3	3.9	4.5	4.9	5.3	5.5	5.7	5.7
45	1.5	2.4	3.2	3.9	4.5	4.9	5.3	5.6	5.8	5.8
50	1	2.0	2.9	3.6	4.2	4.8	5.2	5.5	5.6	5.7
55	.34	1.4	2.3	3.1	3.8	4.4	4.8	5.1	5.3	5.4
60	-.55	.57	1.6	2.4	3.2	3.8	4.2	4.6	4.8	4.9
65	-1.6	-.44	.61	1.5	2.3	2.8	3.4	3.8	4	4.1
70	-2.9	-1.7	-.55	.4	1.2	1.9	2.4	2.8	3	3.1
75	-4.4	-3.1	-1.9	-.92	-.07	.63	1.2	1.6	1.8	1.9
80	0	0	-3.5	-2.5	-1.6	-.84	-.27	.13	.38	.46
85	0	0	0	-4.2	-3.3	-2.5	-1.9	-1.5	-1.3	-1.2
90	0	0	0	0	0	-4.5	-3.8	-3.4	-3.1	-3.1

Table 3 is computed for azimuth angles between 0 ... 45° only. The remaining 3 quadrants look equivalent due to symmetry considerations of all prisms. In case the angle of incidence exceeds the cut-off value of 0.85 rad, the tabulated value for the range was set to 0.

The dependence of the range correction from the orientation angles is relatively weak. In case the tabulated values shall not be used (e.g. for lower precision tasks), a constant value ΔR=3 ($\pm$3) mm can be used.

Equations (2) and (3) represent the ideal case if one prism is contributing to the signal (the "Dominating Prism Approximation"). It can be shown [RD 5] that the error in computing the range correction with the above assumption is less than 1 mm.

The range correction ΔR has ***to be added*** to all laser ranges from ground to the LRR.

The only wavelength-dependent parameter within equations (2) and (3) is the group index of refraction for the quartz material. The cube corner prisms for the CHAMP and GRACE missions were produced from Suprasil® and Homosil®, respectively. These optical materials are well defined with respect to their optical parameters. For the LRR on GRACE-FO, Suprasil® is used

again. Using the manufacturer's data for the refractivity as a function of the wavelength, the following Table 4 was obtained for the most important laser wavelengths:

Table 4: Wavelength dependence of phase and group index of refractivity for quartz glasses and important laser wavelengths

	Suprasil® (CHAMP, GRACE-FO)		Homosil® (GRACE)	
λ [µm]	**n**	**ng**	**n**	**ng**
0.355	1.4761	1.5329	1.4762	1.5333
0.425	1.4678	1.5064	1.4679	1.5067
0.532	1.4607	1.4853	1.4608	1.4855
0.850	1.4525	1.4657	1.4526	1.4658
1.064	1.4496	1.4624	1.4497	1.4625

The vast majority of SLR stations use the 2nd harmonic of Nd:YAG (0.532 µm), very few systems operate on Ti:Sapphire (0.850/0.425 µm). The 1st and 3rd harmonic wavelength of Nd:YAG are presently not used.

The maximum value for the range correction according to (2) applies for normal light incidence to the prism front surface ($\gamma = 0$). It can be tabulated according to Table 5

Table 5: Wavelength dependence of maximum range correction

Wavelength [µm]	0.355	0.425	0.532	0.850	1.064
Range corr. [mm]	4.48	5.22	5.81	6.36	6.45

The CoM Correction

While SLR ground stations perform laser ranging to the LRR, the precise orbit of the satellite is described with respect to its Center of Mass which usually does not coincide with the invariant point of the LRR. In case we define two vectors

- $\vec{S}$ as the vector from the CoM to the reference point of the LRR
- $\vec{C}$ as the unit vector from the satellite to the SLR ground station according to

$$\vec{C} = \begin{pmatrix} C_x \\ C_y \\ C_z \end{pmatrix} = \begin{pmatrix} \sin(\delta)\cdot\cos(\alpha) \\ \sin(\delta)\cdot\sin(\alpha) \\ \cos(\delta) \end{pmatrix} \tag{4}$$

with α,δ the azimuth and nadir angles between satellite and SLR station (cf. Figure 8 for the explanation of α, δ and $\vec{C}$), then the CoM correction is given by

$$CoM(\alpha,\delta) = \left(\vec{S}\cdot\vec{C}\right) + \Delta R(\alpha,\delta) \tag{5}$$

as the scalar product between the two vectors $\vec{S}$ and $\vec{C}$ plus the range correction of the LRR array itself, referring the measurements to the LRR reference point.

While the range correction ΔR is discussed in detail above, the vector $\vec{C}$ depends on the momentary relative position between SLR ground station and S/C and has to be computed for the given ranging period from the orbital parameters and the station coordinates.

The vector $\vec{S}$ has to be defined by the GRACE-FO satellite manufacturer as soon as the exact location of the LRR with respect to the S/C CoM is established.

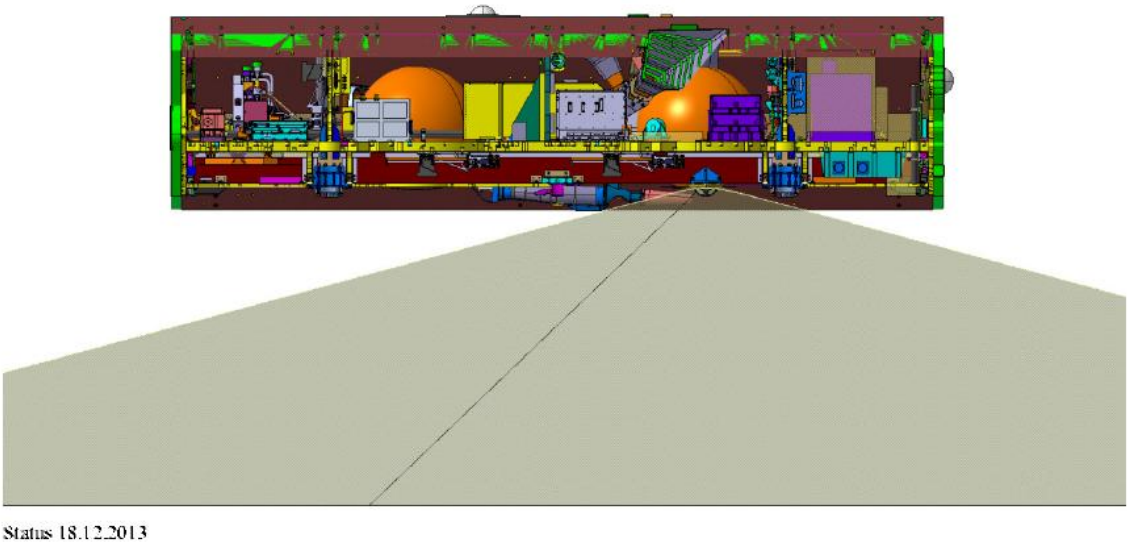

Figure 9: Location and LRR FoV (S/C design from [AD 1])

The Influence of S/C Attitude

With the CoM correction given by equation (5) it becomes obvious that the S/C attitude will have an influence on the exact value of the CoM correction for laser ranges performed to the GRACE-FO satellites. The second term in (5), the range correction, is nearly invariable for small changes in the attitude which influence the azimuth and nadir angles (cf. the tabulated range correction according to Table 3).

The first term in (5), the eccentricity correction, is expressed according to

$$\left(\vec{S}\cdot\vec{C}\right)=\begin{pmatrix} S_x \\ S_y \\ S_z \end{pmatrix}\cdot\begin{pmatrix} \sin(\delta)\cdot\cos(\alpha) \\ \sin(\delta)\cdot\sin(\alpha) \\ \cos(\delta) \end{pmatrix} \tag{6}$$

with S_x, S_y, S_z the components of the vector from S/C CoM to the LRR reference point and α, δ the azimuth and nadir angles between S/C and SLR ground station.

Attitude deviations about Roll, Pitch and Yaw can be expressed by a (3 x 3) rotation matrix with

$$R_x=\begin{pmatrix} 1 & 0 & 0 \\ 0 & \cos\Phi & -\sin\Phi \\ 0 & \sin\Phi & \cos\Phi \end{pmatrix},\ R_y=\begin{pmatrix} \cos\Theta & 0 & -\sin\Theta \\ 0 & 1 & 0 \\ \sin\Theta & 0 & \cos\Theta \end{pmatrix},\ R_z=\begin{pmatrix} \cos\Psi & -\sin\Psi & 0 \\ \sin\Psi & \cos\Psi & 0 \\ 0 & 0 & 1 \end{pmatrix} \tag{7}$$

and Φ, Θ, Ψ the deviation angles about Roll Pitch and Yaw.

The worst case is given when the two vectors $\vec{S}$ and $\vec{C}$ are orthogonal. In this case a small rotation within the plane of both vectors will cause a range error $\left|\vec{S}\right|\cdot d\alpha$ with $d\alpha$ the attitude error. The farther the excentricity of the LRR from the S/C CoM, the larger will be the influence of attitude deviations on the CoM correction.

For each of the 3 attitude deviation angles it is possible to perform a comparison between the scalar product for the rotated and the non-rotated case (i.e. a tabulation) and to add the values from all 3 tables quadratically, assuming that the attitude deviation angles are normally independent.

A numerical example is given below:

With $\vec{S} = \begin{pmatrix} -600 \\ -327.5 \\ +221 \end{pmatrix}$ (values provided by Airbus)

and $\alpha = 90°$, δ=45° (near culmination of the satellite over the SLR station), a 2° deviation in Roll will change the eccentricity correction from -75.3 mm to -88.8 mm.

A 2° deviation in Pitch will change this value from -75.3 mm to -90.2 mm and a 2° deviation in Yaw will also cause a change from -75.3 mm to -90.0 mm.

Thus it becomes clear that the exact S/C attitude has to be taken into account for applications requiring millimeter accuracy.

LRR Performance Degradation

No performance degradation of the LRR is expected over the complete GRACE-FO mission.

Rationale:

The LRR is a completely rigid and passive instrument with its performance parameters defined by design. The optical material of the quartz prisms is resistant against cosmic radiation (which could give rise to colour centers and therefore reduced transmissivity for non-suited materials) and ATOX. Also the backside aluminium coating is protected by an ATOX-resistant SiO_2 layer.

These statements are proven by the long history of LRR arrays in space. Still the very first SLR satellite (Beacon-Explorer-C, launched in 1964) using quartz glass prisms is still suited for laser ranging purposes without noticeable link budget degradation. Also the GRACE LRRs (launched in 2002) do not show any degraded performance.

5 LRR CONSTRAINTS

The only constraint to be taken into account for the LRR consists the proper orientation of the LRR on the S/C nadir side with respect to the velocity vector (cf. Figure 2 of Section 3). This orientation is mandatory to allow for the proper velocity aberration correction with respect to the transmitting SLR ground station. Because the prisms of the LRR are mounted is a symmetrical way with respect to the LRR X-axis, a 180 degree permutation (or a 180 degree yaw manoeuvre during the orbital exchange of the GRACE-FO satellites) will have no influence on the proper aberration correction.

6 LRR OPERATIONS

Once the protective prism caps are removed and the nominal orientation of the LRR (facing nadir with the GRACE-FO S/C in nominal attitude) is maintained, the instrument is ready for operation without any further prerequisites. Thus, there are no specific modes other than the nominal operational mode defined.

Unit Failure Modes

The only LRR failure mode which can be considered consists in the reduction or loss of optical link budget due to

- Damage of one or more prisms during the ascent of the carrier rocket (e.g. during the fairing separation according to an unwanted collision between parts of the fairing and the LRR)
- Unintended blocking of the LRR FoV due to a loosened part of the S/C nadir side

In the first case, the severity of the failure depends on the number of damaged prisms. Because - as an approximation – one prism dominates one quadrant, this would result in the loss or reduction of optical link budget for this quadrant. No recovery method can be proposed in this case.

Also the blocking of the FoV by parts of the S/C as the result of problems e.g. during S/C separation from the launcher upper stage will have the same effect and is very likely not recoverable.

In the history of launches of LRR arrays onboard different satellites, none of these failure modes has ever occurred.

7 LRR SCIENCE DATA DEFINITION

As an entirely passive instrument, the LRR does not generate own science data. All LRR-related science data is obtained on the SLR ground stations. For completeness, the most important SLR science data format is mentioned here as well.

The observables as measured by SLR ground stations to LLR arrays in space are:

- Two-way roundtrip time of light between ground and space
- Epoch of laser firing with respect to Coordinated Universal Time (UTC)
- Calibration of the excess roundtrip time as caused by electronic signal delays within the ground station circuitry
- Meteorological parameters (pressure, temperature, relative humidity) for performing corrections of the signal path within the atmosphere (correction to be performed by the ILRS analysis center)

SLR stations transmit their ranging pulses at repetition rates between 10 Hz and 2 kHz. For this reason it is not convenient to use the full rate data set per laser pass. The compressed Normal Point Format [RD 6] is used which subdivides the accepted fit residuals of the full rate data into fixed intervals (bins) starting from 0h UTC. Subsequently, the mean value and the mean epoch of the accepted fit residuals within each bin i are computed and the epoch of the observation closest to the mean of the bin interval is used to relate all observations inside the interval to this epoch. The bin sizes vary for the different satellite missions between 5 seconds (LEO satellites as TerraSAR-X and Swarm) and 300 seconds (GNSS orbit). For the GRACE-FO mission it is expected that the Normal Point laser ranging data will be binned in 5 second fit intervals.

The corrected laser range ρ for a given epoch t is expressed by

$$\rho(t) = \rho_{meas} - d_{atm}(p,T,H,El) - Bias + CoM(\alpha,\delta) \tag{8}$$

with

ρ_{meas}	-	measured two-way round trip time of laser signal
$d_{atm}(p,T,H,El)$		tropospheric correction term (depending on surface pressure, temperature, humidity and elevation)
$Bias$	-	excess roundtrip time by station parameters
$CoM(\alpha,\delta)$	-	CoM correction according to (5)

8 PACKAGING, TRANSPORT, HANDLING AND STORAGE PROCEDURE

As long as the GRACE-FO Laser Retro Reflector is not attached to the satellite for system level test or flight purposes, it shall be stored within the delivered vinyl box and secured in its position by 4 M5 screws (delivered).

The protective caps shall be attached to the prism apertures, and the box shall be closed to prevent contamination of the optical surfaces by dust.

The ground operation atmospheric conditions as specified within [AD 1] apply.

In case of the Laser Retro Reflector, no specific handling items or handling constraints other than the ***usual precautions with optical precision equipment*** shall apply. The entrance apertures of the prisms shall be protected against dust and humidity by the delivered protecting caps as long as the LRR is not inspected or tested.

The integration personnel shall wear cotton gloves when dealing with the LRR. Any dust particles on the surfaces of the LRR shall be removed using pressurised dry air. Larger impurities (like fingerprints) may be cleaned cautiously by means of analytically pure organic solvents like acetone or ethanol.

Red-tagged / Green-tagged Items

Red-tagged Items:

The protective caps (made from red plastics) of all four prisms of the LRR have to be removed prior to flight. After removal of the caps, the LRR is ready for flight on GRACE-FO.

Green-tagged items:

No green-tagged items are identified for the GRACE-FO LRR.